EarthAutomations

Computer Vision - AI
Mechanics and simulations applied to Agriculture

EarthAutomations

The "Dood" project was born in June 2014 on the initiative of 3 young entrepreneurs with a specialization in different fields (Finance, Engineering, Agriculture). EarthAutomations Srl was founded in Cosenza (Italy) in 2017.

Mission

"Create an ecosystem of solutions to allow AG Company sustainability thanks to data collection and autonomous operations synergy, improving the decision-making process"

Vision

EarthAutomations vision is to bring a new concept of agriculture based on 4 pillars:

1. Automation: making cultivation processes autonomous through innovative solutions.
2. Information: increase of information available to farmers to increase their analytical capabilities.
3. Integration: creation of an ecosystem of tools focused on the needs of a farm.
4. Simplicity: simple solutions in their use

AGRICULTURAL PROBLEMS

56% of accidents are caused by tractors misusage (overturning)*

Revenues do not cover costs

repetitive and estranging activity

DOOD SOLUTIONS

Operator at a safety distance

30% savings on operational costs

Labour force applied in high value activity

*INAIL Italian data

“Dood”: What is it?

Autonomous crawler robot specifically designed for permanent crops
GNSS PNT and **Artificial Intelligence** allow DOOD to interact with the surrounding environment through the information collected by sensors and cameras

Power Engines	75 hp
Emission Category	Stage V
Powered by	Diesel
Transmission	hydraulic
Autonomy	+10 hours
Width	145 cm
Length	240 cm
Height	130 cm
Light point	36 cm

4G Connection

DOOD
equipped with 3-point hitch and power take-off.

Touchscreen controller equipped with joystick and Wi-Fi conncetion

Cloud: “AERIS”
Thanks to "Aeris", the company can communicate with all active "Doods" and with individual customers (under development).

End User

- 24/7 not interrupted operation potential
- End user always monitored and supported
- Artificial intelligence applied in a "smart" way to optimize operations and reduce costs

READY TO ELECTRIC - "DOOD" IS MUCH MORE THAN A TRACTOR !!

SPECIFICHE TECNICHE

MOTORE	
Stage motore	V
N. di cilindri/Cilindrata/Valvole/Livello emissioni Tier-Stage	4L
Miscela biodiesel approvata	B100**
Potenza nominale del motore ISO TR14396 - ECE R120 (kW/CV)	55 (75) @ 2500
Regime nominale del motore (giri/min)	1.250
Coppia max. ISO TR14396 a 1.300 giri/min (Nm)	281 (29) @ 1250
Capacità serbatoio combustibile (L)	180
Intervallo di manutenzione motore (h)	600

TRASMISSIONE	
Capacità pompa	56 lt
Pressione dell'impianto	28 MPa
Tipologia di circuito	Chiuso
Velocità di spostamento	6 Km/h

PdP	
Regime standard (giri/min)	540/540E
Tipologia	CAT 2
Azionamento	Diretto su frizione

CINGOLI, DIMENSIONI E PESO	
Suole 320 mm (passo 100 mm) (Maglie)	62
Superficie d'appoggio (cm²)	7.140
A Passo (mm)	1.520
B Carreggiata (mm)	900
C Larghezza max. (mm)	1.410
D Lunghezza max. (mm)	3.281
E Luce (mm)	350
F Altezza massima (mm) (moduli visione)	1.529
Peso in ordine di marcia (kg)	3.200

IMPIANTO IDRAULICO	
Sollevatore meccanico	2 + 3° punto idraulico
Capacità di sollevamento max. alle rotule (kg)	3.535
Capacità (L/min)	20
Numero max. di distributori idraulici posteriori	5
Capacità serbatoio (lt)	120

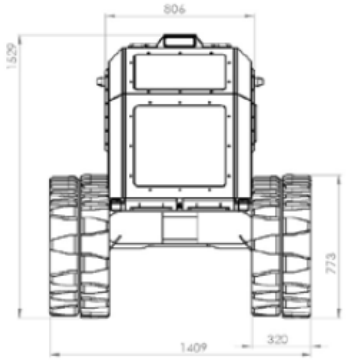

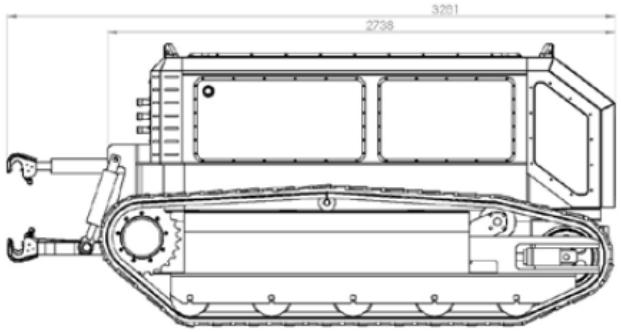

SPECIFICHE TECNICHE

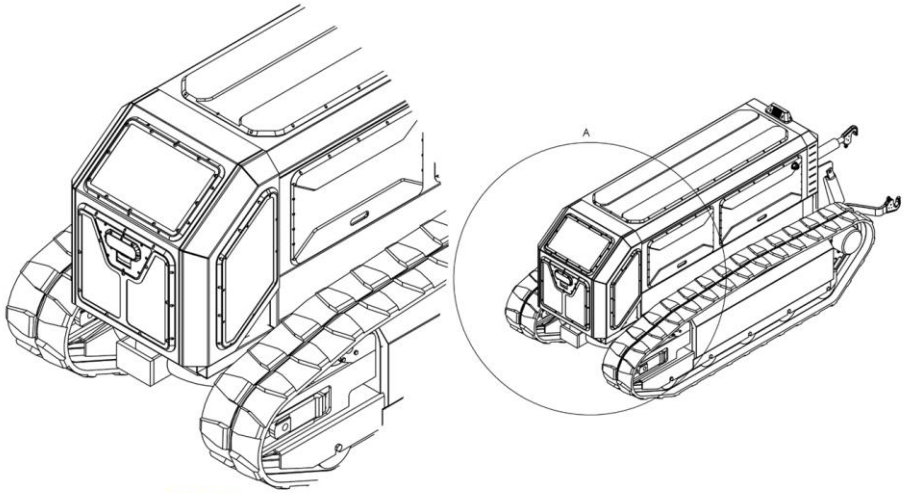

DETTAGLIO A
SCALA 1 : 10

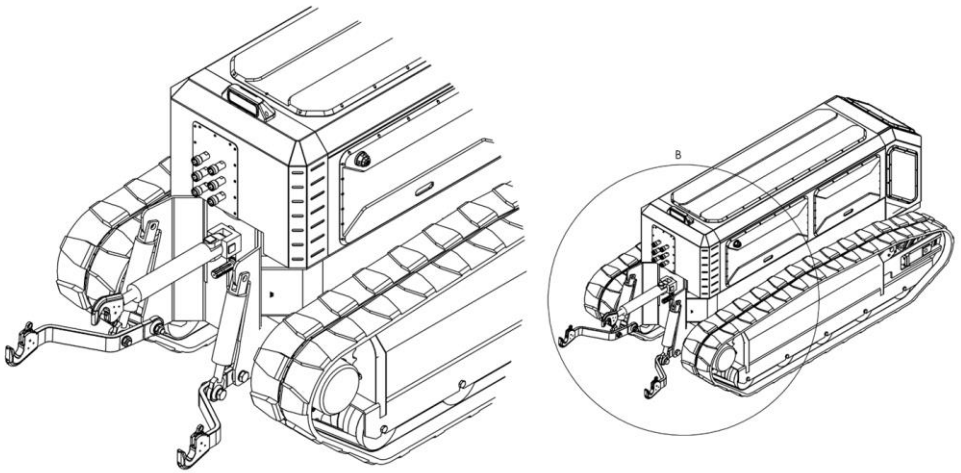

DETTAGLIO B
SCALA 1 : 10

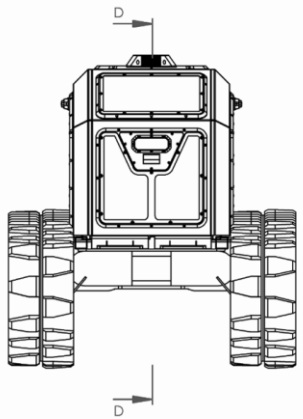

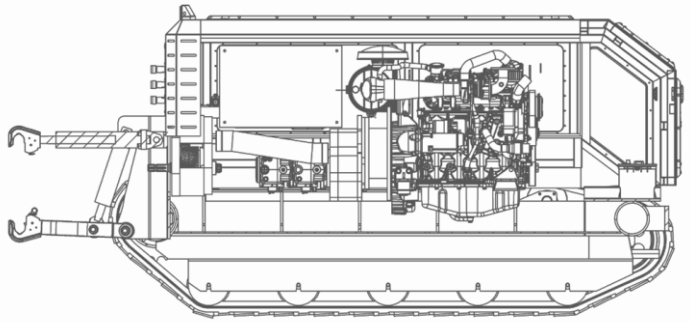

SEZIONE D-D

AI Solution

Neural Network

SLAM

Path Recognition

3D Mapping

Path Regularization

Simulation &
Task Planning

Neural Network

Neural Network applied to image processing to recognize to self improve to understand the surrounding environment

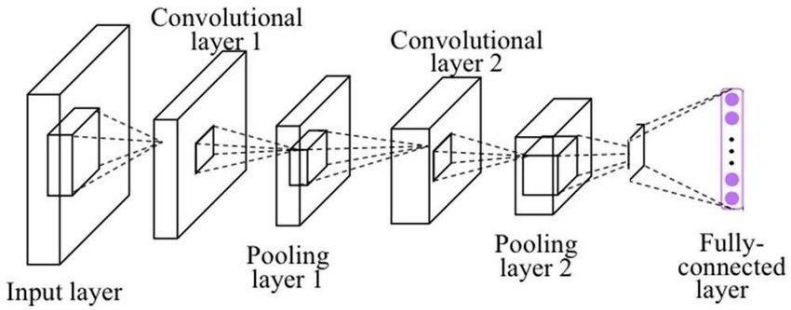

Flow Description

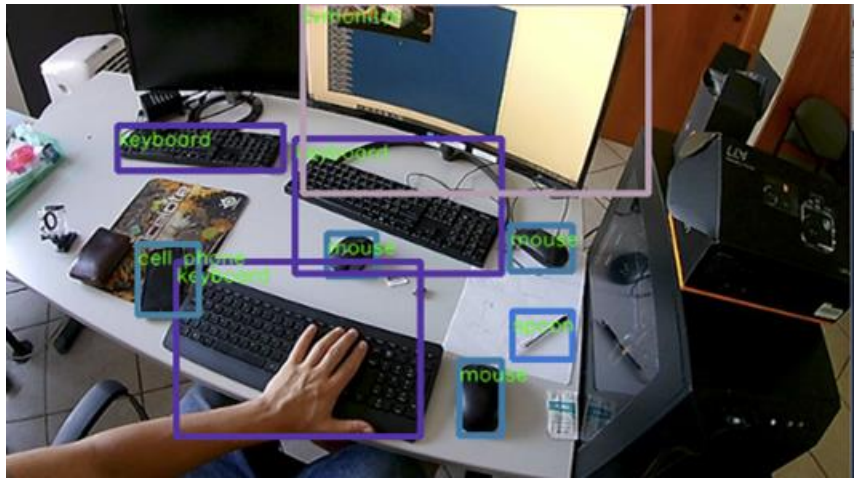

Machine learning capability on recognizing objects

Path Recognition

Recognition of the environment and recognize autonomously where is possible to move

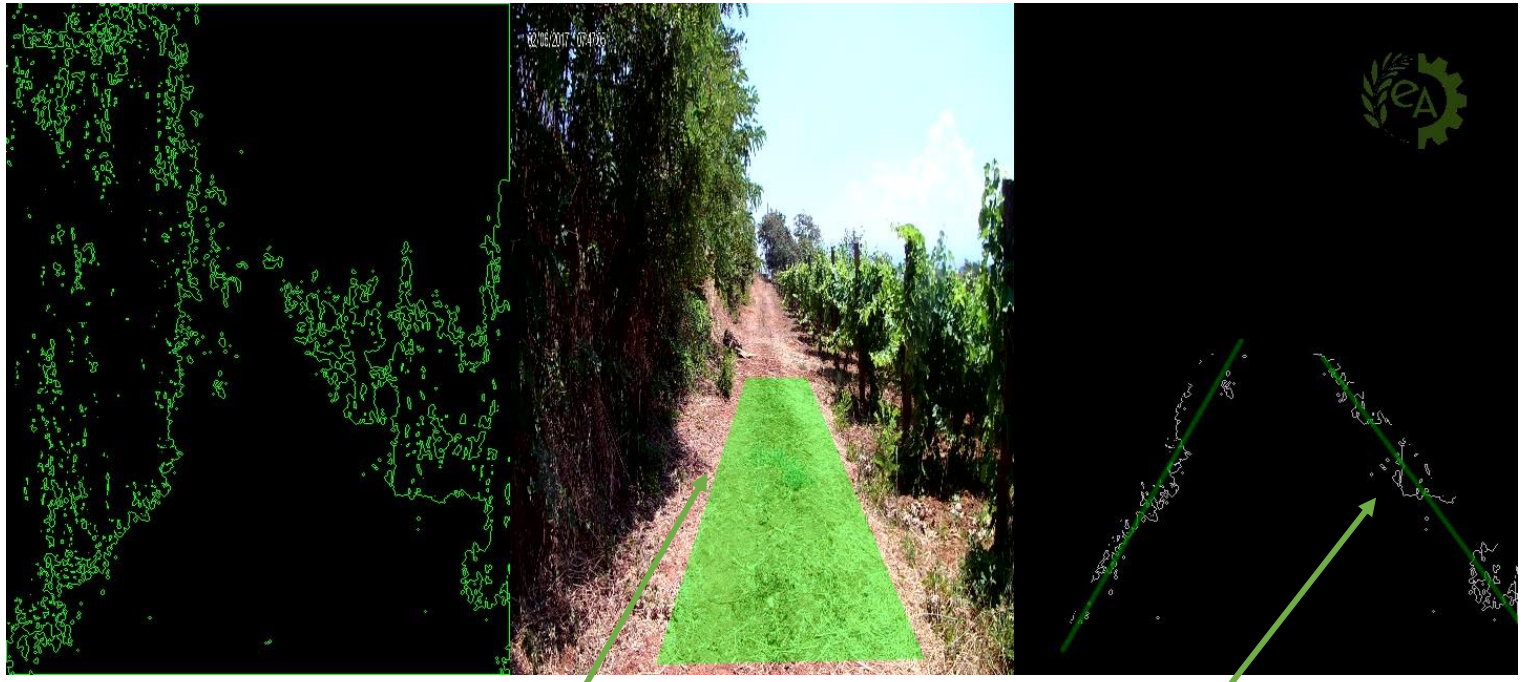

The AI automatically recognizes the limits in which it can move

Path Regularization

Regularization of point path to understand the best path to follow

The AI automatically recognizes the outlier in the path and finds improvement possibility

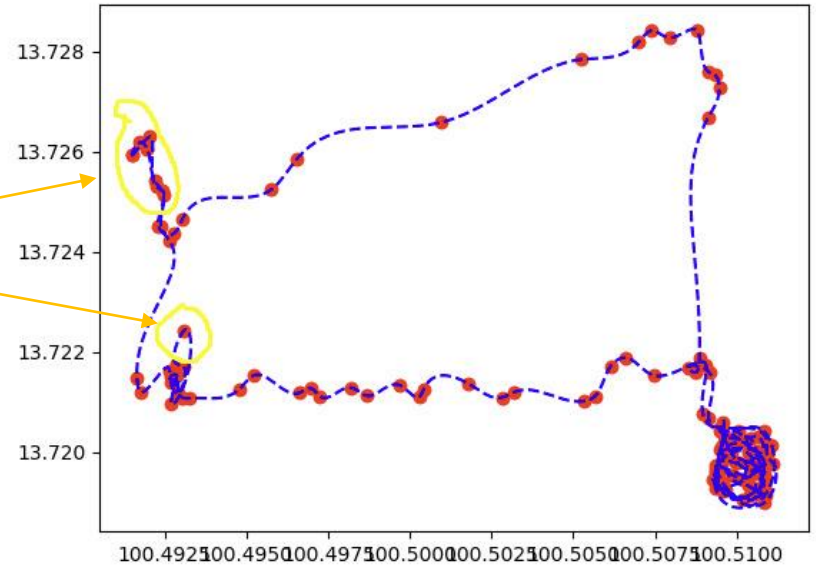

3D Mapping

Environment reconstruction to allocate in the space the different information collected

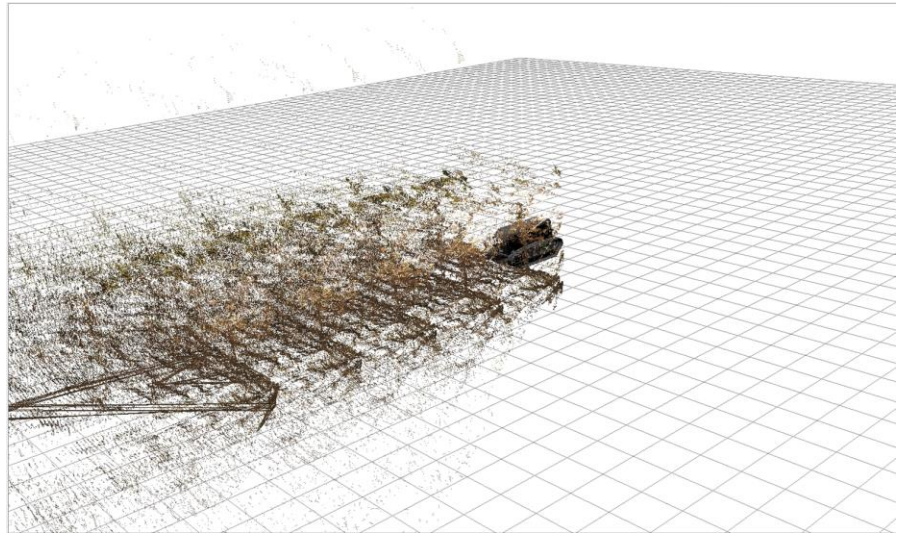

Post processing 3D reconstruction of machine work

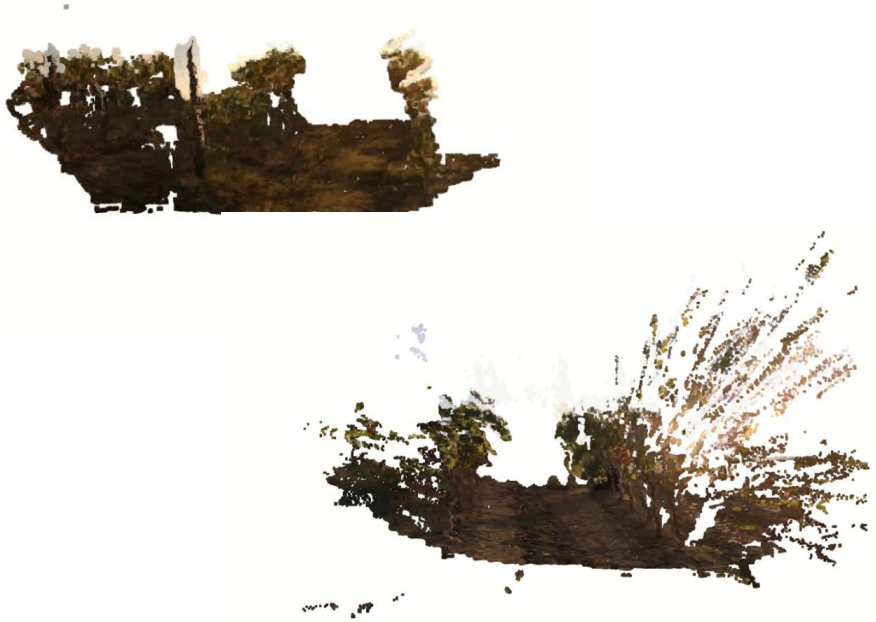

Environmental reconstruction

Simultaneous localization and Mapping that allow the machine to understand itself position in the environment

SLAM

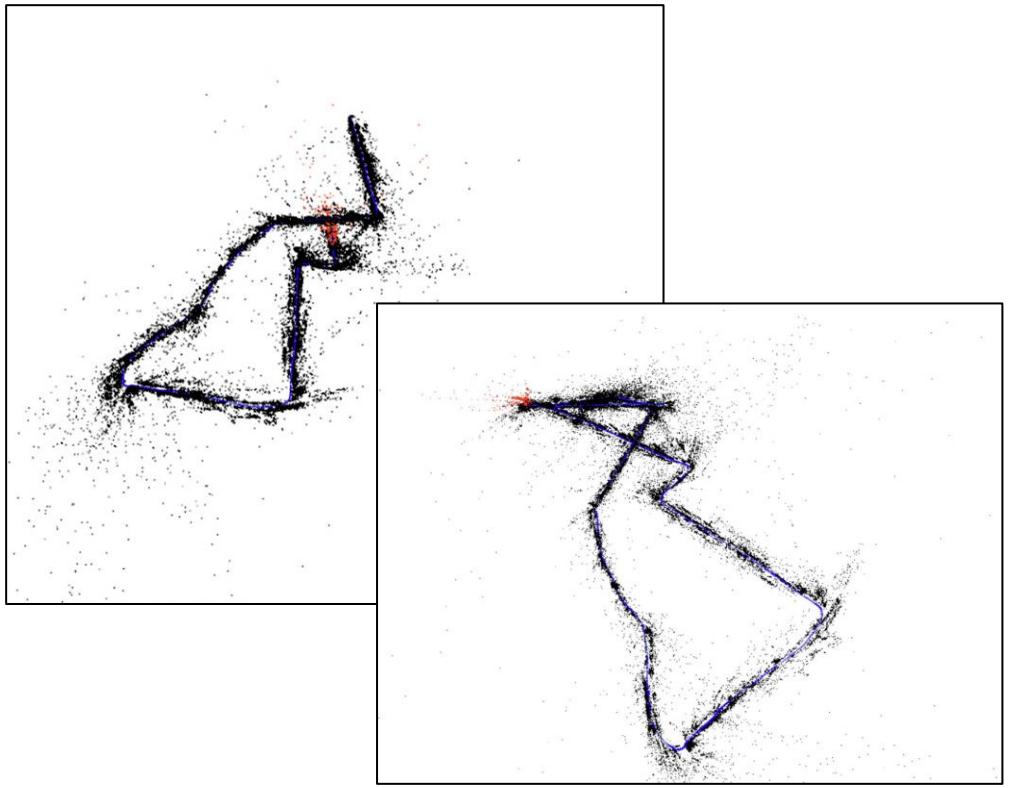

Complete path overview with localization (red point)

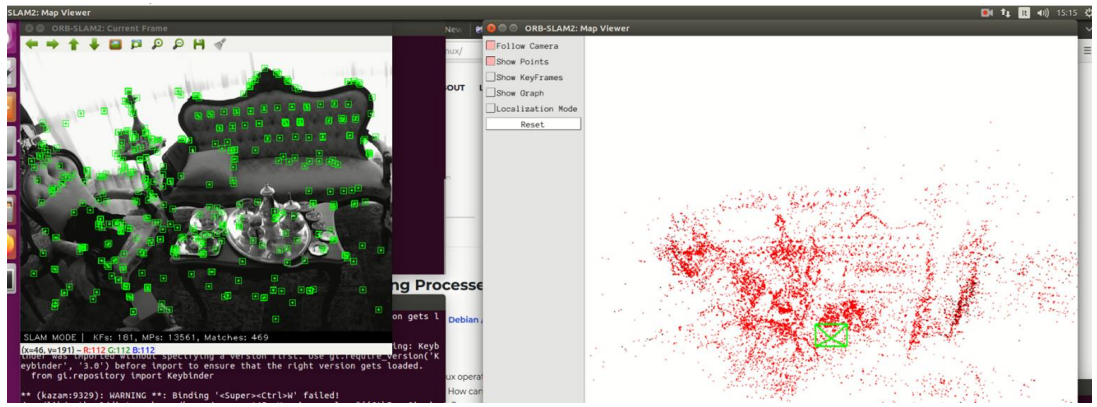

Environment mapping

Simulation &
Task
Planning

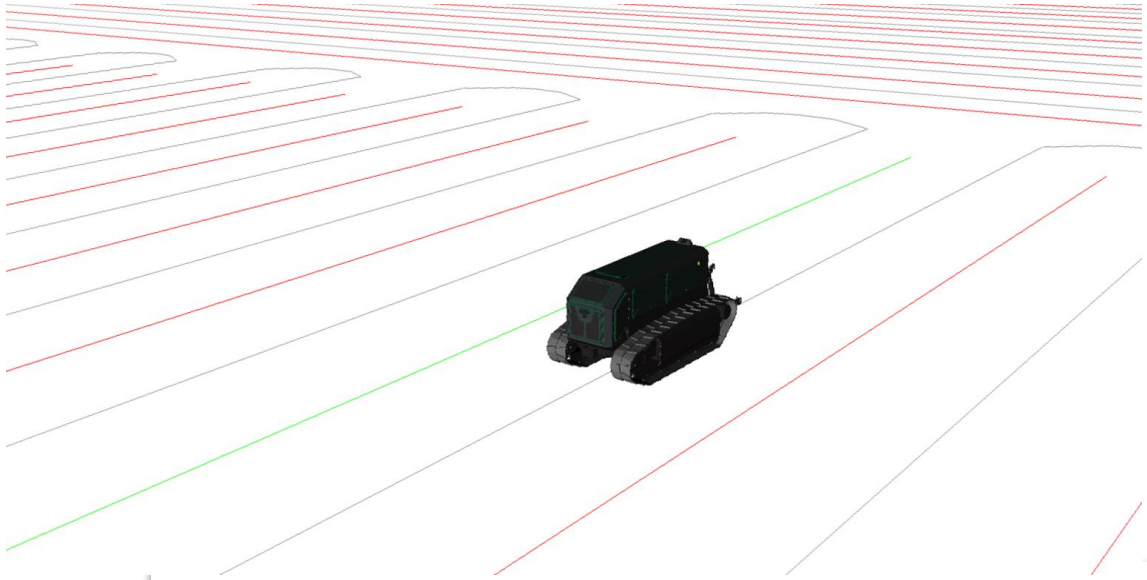

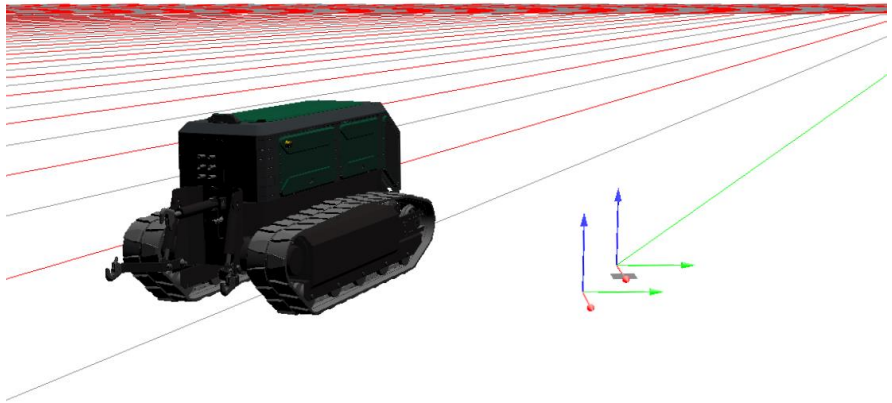

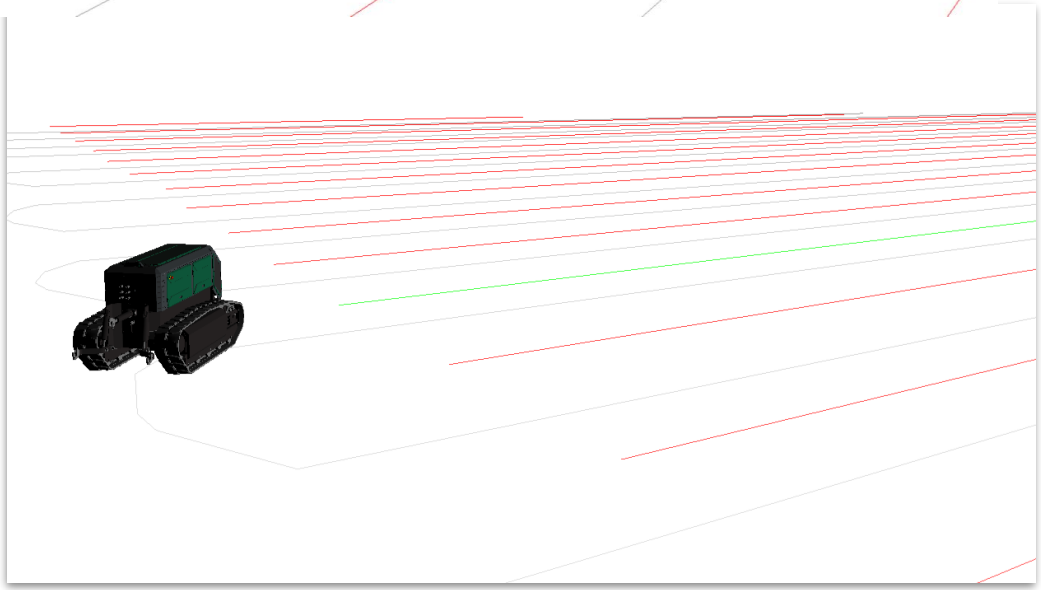

EarthAutomations

GRAZIE PER LA CORTESE ATTENZIONE